FARO BARCELONA

VIA EVOLUTION UP & DOWN

WALL LAMP

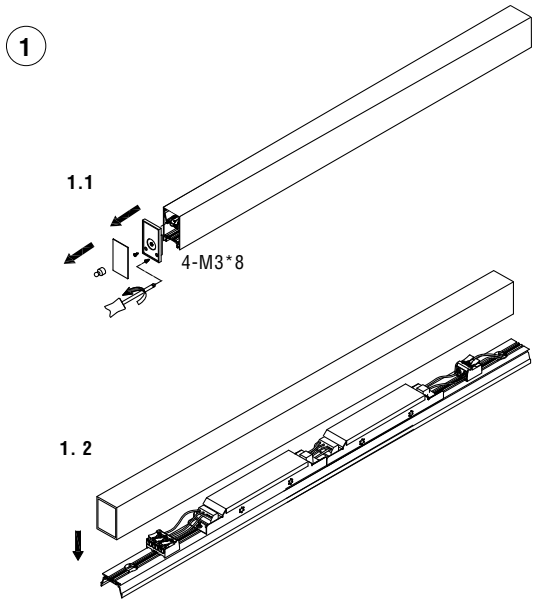

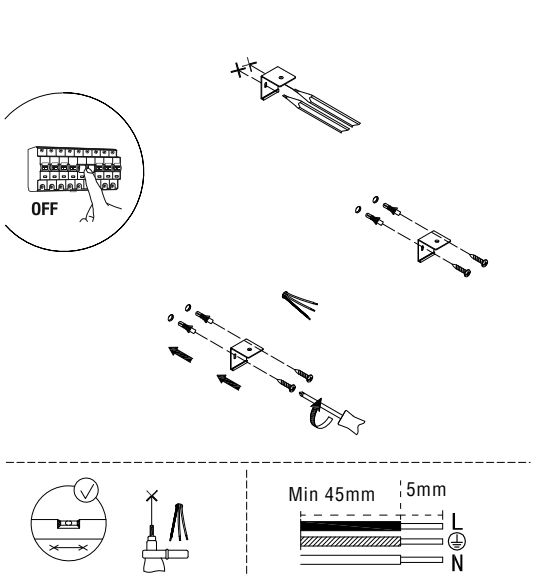

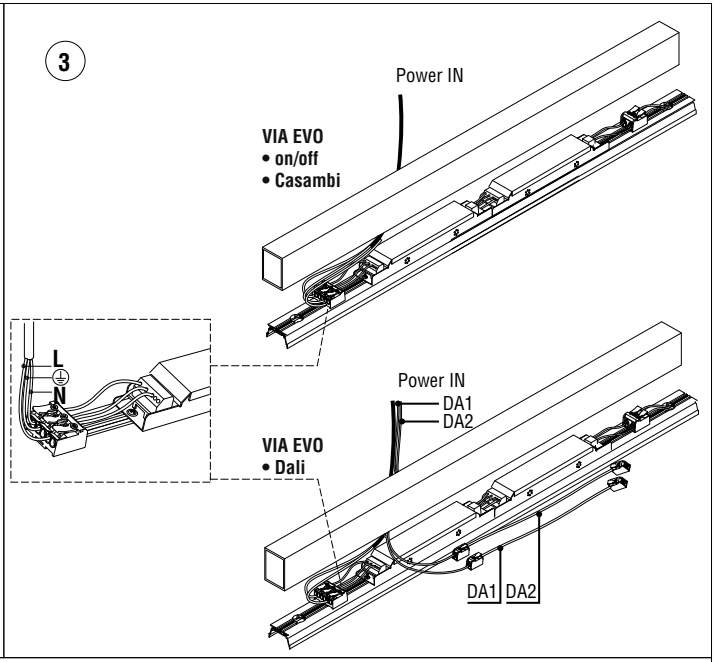

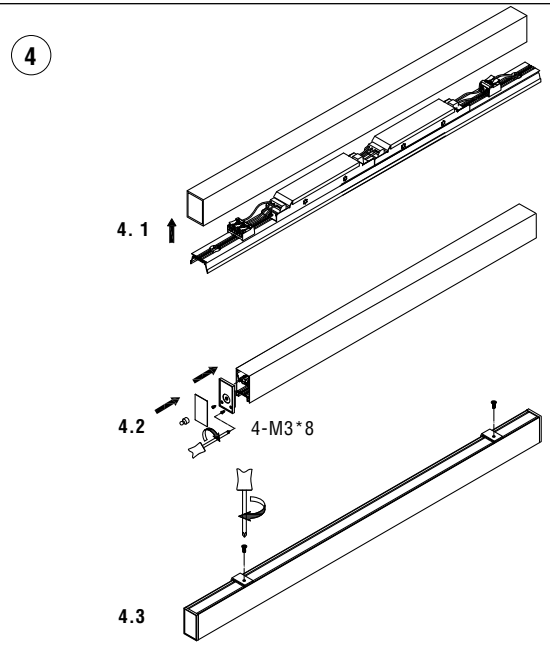

VIA ACCESORY FOR CONTINUOUS LINE ref. 040000097

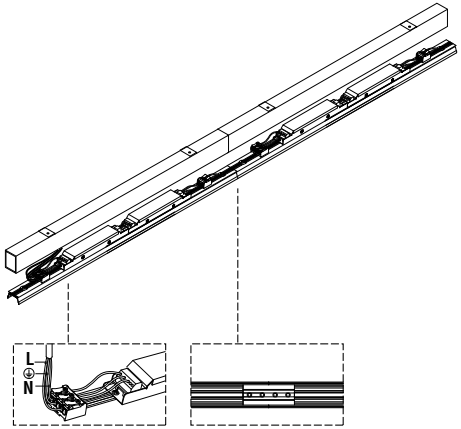

Connector Kit

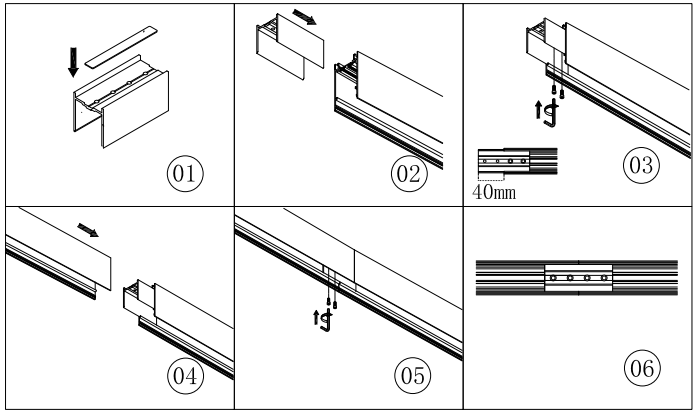

Electrical Jumper

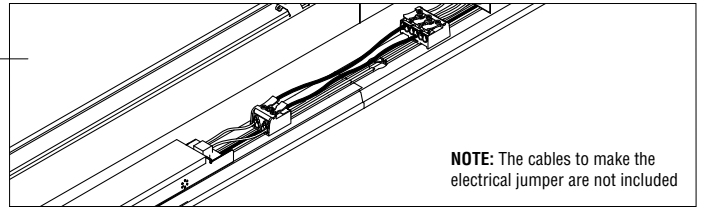

NOTE: The cables to make the electrical jumper are not included

B C

This product contains a light source of energy efficiency class B or C. See **www.faro.es**

Este producto contiene una fuente luminosa de la clase eficiencia energética F. Ver **www.faro.es**

Together we take care of the planet